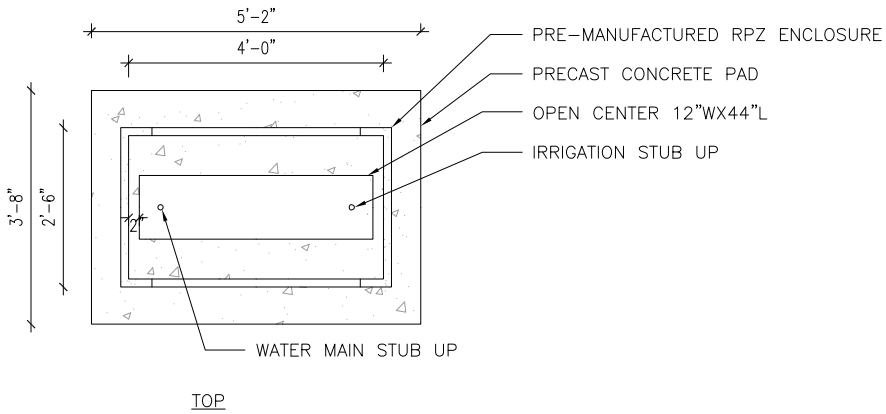
5'-2"
4'-0"
3'-8"
2'-6"
2"
PRE-MANUFACTURED RPZ ENCLOSURE
PRECAST CONCRETE PAD
OPEN CENTER 12"WX44"L
IRRIGATION STUB UP
WATER MAIN STUB UP
TOP

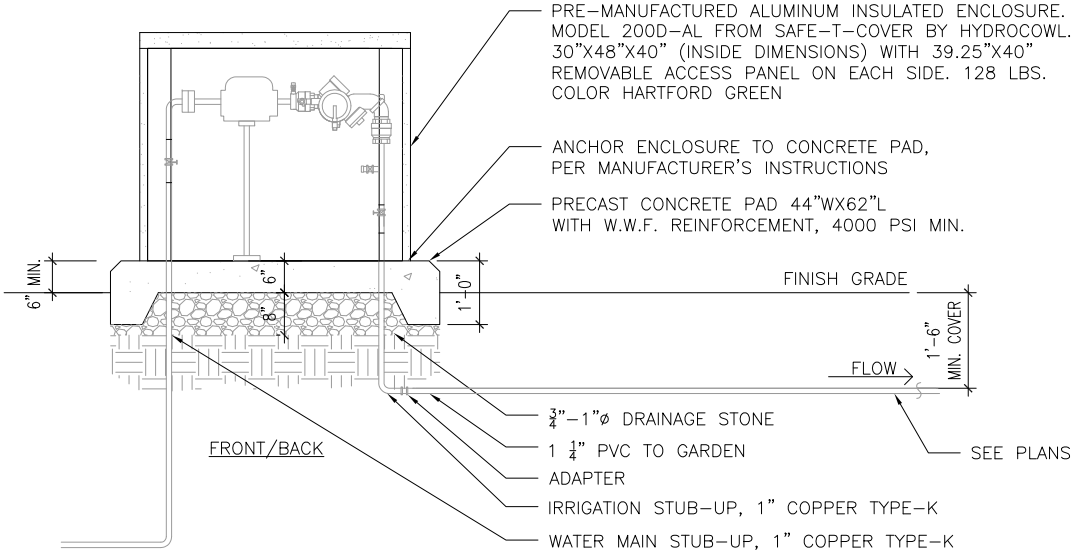
PRE-MANUFACTURED ALUMINUM INSULATED ENCLOSURE. MODEL 200D-AL FROM SAFE-T-COVER BY HYDROCOWL. 30"X48"X40" (INSIDE DIMENSIONS) WITH 39.25"X40" REMOVABLE ACCESS PANEL ON EACH SIDE. 128 LBS. COLOR HARTFORD GREEN
ANCHOR ENCLOSURE TO CONCRETE PAD, PER MANUFACTURER'S INSTRUCTIONS
PRECAST CONCRETE PAD 44"WX62"L WITH W.W.F. REINFORCEMENT, 4000 PSI MIN.
6" MIN.
6"
8"
1'-0"
FINISH GRADE
1'-6" MIN. COVER
FLOW
3/4"-1"ø DRAINAGE STONE
1 1/4" PVC TO GARDEN
ADAPTER
IRRIGATION STUB-UP, 1" COPPER TYPE-K
WATER MAIN STUB-UP, 1" COPPER TYPE-K
SEE PLANS
FRONT/BACK